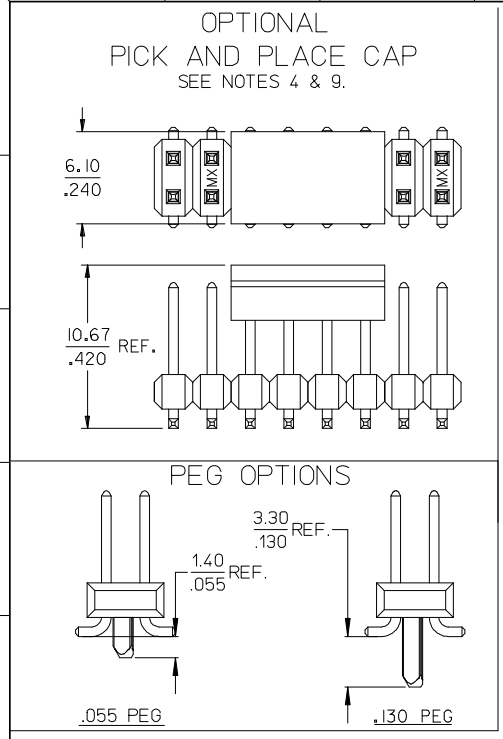

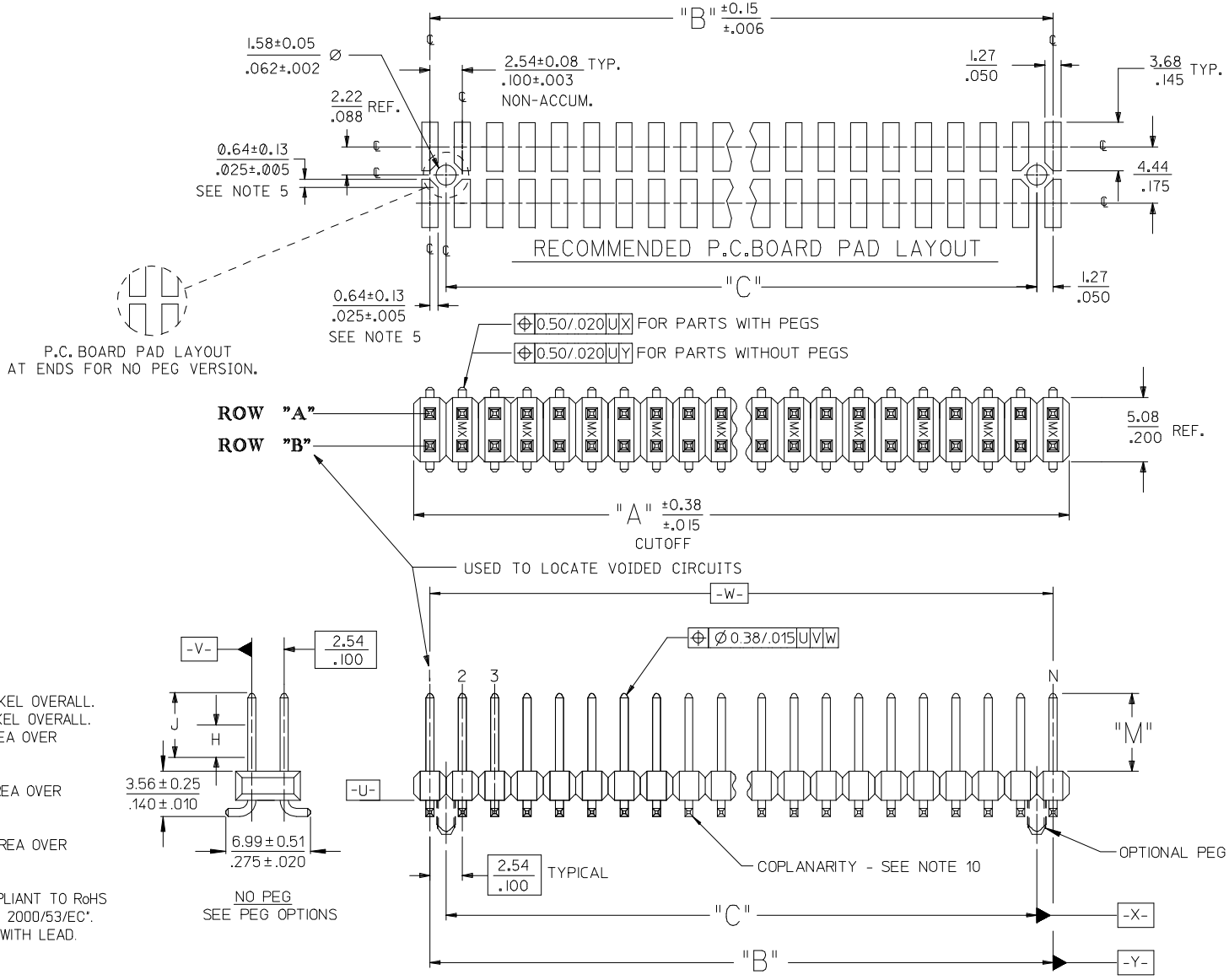

NOTES.

1. MATERIALS: INSULATOR: GLASS FILLED LIQUID CRYSTAL POLYMER (LCP). UL94 V-0, COLOR BLACK
   TERMINAL: PHOSPHOR BRONZE
2. FINISH:
   59 TIN - 0.00150/.000059 MINIMUM BRIGHT TIN OVER NICKEL OVERALL.
   150 TIN - 0.00381/.000150 MINIMUM BRIGHT TIN OVER NICKEL OVERALL.
   15 GOLD - 0.00038/.000015 MINIMUM GOLD IN SELECT AREA OVER 0.00191/.000075 MINIMUM TIN IN SELECT AREA OVER NICKEL OVERALL.
   30 GOLD - 0.00076/.000030 MINIMUM GOLD IN SELECT AREA OVER 0.00191/.000075 MINIMUM TIN IN SELECT AREA OVER NICKEL OVERALL.
   50 GOLD - 0.00127/.000050 MINIMUM GOOLD IN SELECT AREA OVER 0.00254/.000100 MINIMUM TIN IN SELECT AREA OVER NICKEL OVERALL.
   * THE PRIMARY SHIPPING CARTON WILL BE LABELED "COMPLIANT TO RoHS DIRECTIVE 2002/95/EC AND ELV ANNEX II OF DIRECTIVE 2000/53/EC". CARTONS WITHOUT THIS LABEL MAY CONTAIN PRODUCT WITH LEAD.
3. PART TO CONFORM TO PS-71308.
4. PACKAGING (SEE CHARTS):
   BULK: PER PK-70873-0353
   TUBES: PER PK-70873-0041.
   71308-82** IN TUBES: PER PK-70873-042.
   TUBES W/ VAC CAPS: PER PK-70873-0691
   TAPE AND REEL W/ VAC CAPS: PER PK-70873-0805.
   SEE SHEET 3 FOR TAPE & REEL PRODUCT WITH SHALLOW POCKET REQUIREMENTS.
5. TYP. DIMENSIONS FOR LANDS SURROUNDING HOLES FOR RETETION PEGS.
6. PIN SOLERABILITY PER MOLEX SPEC. ES-152.
7. SEE SHEETS 2-5 FOR CHARTED DIMS., PART/EDP NO'S, AND VOIDED CIRCUITS.
8. PIN PUSHOUT FORCE: 3 LBS. MINIMUM.
9. PICK-N-PLACE CAPS WILL BE PLACED SO THAT VACUUM PICK UP AREA WILL BE IN CENTER OF PART.
10. COPLANARITY FOR CIRCUIT SIZES UP TO 40 IS 0.15 MM/.006 INCH. FOR CIRCUIT SIZES 42 AND LARGER, CONTACT MOLEX SALES DEPARTMENT.
11. THIS PART CONFORMS TO CLASS B REQUIREMENTS OF COSMETIC SPECIFICATION PS-45499-002.

CLARIFY PACKAGING	DESCRIPTION	
EC NO: UCP2009-0323	DRWN:GAVERILL	2008/08/22
	CH'KD:MKIPPER	2008/08/26
	APPR:FSMITH	2008/08/27
K1	REV	

QUALITY SYMBOLS: ▼=0, (C)=0

GENERAL TOLERANCES (UNLESS SPECIFIED)	mm	INCH
4 PLACES	± ---	± ---
3 PLACES	± ---	± .005
2 PLACES	± 0.13	± .010
1 PLACE	± 0.25	± ---
ANGULAR ±1/2°		

DRAFT WHERE APPLICABLE MUST REMAIN WITHIN DIMENSIONS

DIMENSION STYLE: MM/IN	SCALE	DESIGN UNITS: INCH	THIRD ANGLE PROJECTION
DRAWN BY: KMS	DATE: 1999/10/15	TITLE: SALES ASSY INSULATOR DUAL ROW SMT W/BREAK-OFF .025SQ PIN GULLWING .100	
CHECKED BY: KMS	DATE: 1999/10/15		
APPROVED BY: KMS	DATE: 1999/10/15	molex MOLEX INCORPORATED	
MATERIAL NO.: SEE TABLES		DOCUMENT NO.: SD-71308-001	SHEET NO.: 1 OF 6
SIZE: C		THIS DRAWING CONTAINS INFORMATION THAT IS PROPRIETARY TO MOLEX INCORPORATED AND SHOULD NOT BE USED WITHOUT WRITTEN PERMISSION	

PACKAGING SEE NOTE 4 SHT 1			4-6 CKT	BULK	TAPE-N-REEL W/ VAC CAPS	N/A	BULK	TAPE-N-REEL W/ VAC CAPS	N/A	BULK	TAPE-N-REEL W/ VAC CAPS	N/A		BULK	BULK	
			8-100 CKT	TUBES	TAPE-N-REEL W/ VAC CAPS	TUBES W/ VAC CAPS	TUBES	TAPE-N-REEL W/ VAC CAPS	TUBES W/ VAC CAPS	TUBES	TAPE-N-REEL W/ VAC CAPS	TUBES W/ VAC CAPS		TUBES	TUBES	
DIM. M±0.25 MM				6.10 (.240)			6.10 (.240)				6.10 (.240)			8.13 (.320)	8.13 (.320)	
PLATING				150 TIN			15 GOLD				30 GOLD			15 GOLD	30 GOLD	
DIM. H				2.54 (.100)			2.54 (.100)				2.54 (.100)			4.57 (.180)	4.57 (.180)	
DIM. J				5.08 (.200)			5.08 (.200)				5.08 (.200)			7.11 (.280)	7.11 (.280)	
CKTS	DIM. A MM	DIM. A IN	DIM. B MM	DIM. B IN	EDP NUMBER	EDP NUMBER	EDP NUMBER	EDP NUMBER	EDP NUMBER	EDP NUMBER	EDP NUMBER	EDP NUMBER		EDP NUMBER	EDP NUMBER	CKTS
04	5.08	.200	2.54	.100	015-91-2040	015-91-6040	N/A	015-91-0040	015-91-6042	N/A	015-91-3040	015-91-6043	N/A	015-91-0048	015-91-5049	04
06	7.62	.300	5.08	.200	015-91-2060	015-91-6060	N/A	015-91-0060	015-91-6062	N/A	015-91-3060	015-91-6063	N/A	015-91-0068	015-91-5069	06
08	10.16	.400	7.62	.300	015-91-2080	015-91-6080	015-91-3087	015-91-0080	015-91-6082	015-91-3086	015-91-3080	015-91-6083	015-91-3088	015-91-0088	015-91-5089	08
10	12.70	.500	10.16	.400	015-91-2100	015-91-6100	015-91-3107	015-91-0100	015-91-6102	015-91-3106	015-91-3100	015-91-6103	015-91-3108	015-91-0108	015-91-5109	10
12	15.24	.600	12.70	.500	015-91-2120		015-91-3127	015-91-0120		015-91-3126	015-91-3120		015-91-3128	015-91-0128	015-91-5129	12
14	17.78	.700	15.24	.600	015-91-2140	015-91-6140	015-91-3147	015-91-0140	015-91-6142	015-91-3146	015-91-3140	015-91-6143	015-91-3148	015-91-0148	015-91-5149	14
16	20.32	.800	17.78	.700	015-91-2160	015-91-6160	015-91-3167	015-91-0160	015-91-6162	015-91-3166	015-91-3160	015-91-6163	015-91-3168	015-91-0168	015-91-5169	16
18	22.86	.900	20.32	.800	015-91-2180		015-91-3187	015-91-0180		015-91-3186	015-91-3180		015-91-3188	015-91-0188	015-91-5189	18
20	25.40	1.000	22.86	.900	015-91-2200	015-91-6200	015-91-3207	015-91-0200	015-91-6202	015-91-3206	015-91-3200	015-91-6203	015-91-3208	015-91-0208	015-91-5209	20
22	27.94	1.100	25.40	1.000	015-91-2220		015-91-3227	015-91-0220		015-91-3226	015-91-3220		015-91-3228	015-91-0228	015-91-5229	22
24	30.48	1.200	27.94	1.100	015-91-2240		015-91-3247	015-91-0240		015-91-3246	015-91-3240		015-91-3248	015-91-0248	015-91-5249	24
26	33.02	1.300	30.48	1.200	015-91-2260		015-91-3267	015-91-0260		015-91-3266	015-91-3260		015-91-3268	015-91-0268	015-91-5269	26
28	35.56	1.400	33.02	1.300	015-91-2280		015-91-3287	015-91-0280		015-91-3286	015-91-3280		015-91-3288	015-91-0288	015-91-5289	28
30	38.10	1.500	35.56	1.400	015-91-2300		015-91-3307	015-91-0300		015-91-3306	015-91-3300		015-91-3308	015-91-0308	015-91-5309	30
32	40.64	1.600	38.10	1.500	015-91-2320		015-91-3327	015-91-0320		015-91-3326	015-91-3320		015-91-3328	015-91-0328	015-91-5329	32
34	43.18	1.700	40.64	1.600	015-91-2340		015-91-3347	015-91-0340		015-91-3346	015-91-3340		015-91-3348	015-91-0348	015-91-5349	34
36	45.72	1.800	43.18	1.700	015-91-2360		015-91-3367	015-91-0360		015-91-3366	015-91-3360		015-91-3368	015-91-0368	015-91-5369	36
38	48.26	1.900	45.72	1.800	015-91-2380		015-91-3387	015-91-0380		015-91-3386	015-91-3380		015-91-3388	015-91-0388	015-91-5389	38
40	50.80	2.000	48.26	1.900	015-91-2400	015-91-6400	015-91-3407	015-91-0400	015-91-6402	015-91-3406	015-91-3400	015-91-6403	015-91-3408	015-91-0408	015-91-5409	40
42	53.34	2.100	50.80	2.000	015-91-2420		015-91-3427	015-91-0420		015-91-3426	015-91-3420		015-91-3428	015-91-0428	015-91-5429	42
44	55.88	2.200	53.34	2.100	015-91-2440		015-91-3447	015-91-0440		015-91-3446	015-91-3440		015-91-3448	015-91-0448	015-91-5449	44
46	58.42	2.300	55.88	2.200	015-91-2460		015-91-3467	015-91-0460		015-91-3466	015-91-3460		015-91-3468	015-91-0468	015-91-5469	46
48	60.96	2.400	58.42	2.300	015-91-2480		015-91-3487	015-91-0480		015-91-3486	015-91-3480		015-91-3488	015-91-0488	015-91-5489	48
50	63.50	2.500	60.96	2.400	015-91-2500	015-91-6500	015-91-3507	015-91-0500	015-91-6502	015-91-3506	015-91-3500	015-91-6503	015-91-3508	015-91-0508	015-91-5509	50
52	66.04	2.600	63.50	2.500	015-91-2520		015-91-3527	015-91-0520		015-91-3526	015-91-3520		015-91-3528	015-91-0528	015-91-5529	52
54	68.58	2.700	66.04	2.600	015-91-2540		015-91-3547	015-91-0540		015-91-3546	015-91-3540		015-91-3548	015-91-0548	015-91-5549	54
56	71.12	2.800	68.58	2.700	015-91-2560		015-91-3567	015-91-0560		015-91-3566	015-91-3560		015-91-3568	015-91-0568	015-91-5569	56
58	73.66	2.900	71.12	2.800	015-91-2580		015-91-3587	015-91-0580		015-91-3586	015-91-3580		015-91-3588	015-91-0588	015-91-5589	58
60	76.20	3.000	73.66	2.900	015-91-2600		015-91-3607	015-91-0600		015-91-3606	015-91-3600		015-91-3608	015-91-0608	015-91-5609	60
62	78.74	3.100	76.20	3.000	015-91-2620		015-91-3627	015-91-0620		015-91-3626	015-91-3620		015-91-3628	015-91-0628	015-91-5629	62
64	81.28	3.200	78.74	3.100	015-91-2640		015-91-3647	015-91-0640		015-91-3646	015-91-3640		015-91-3648	015-91-0648	015-91-5649	64
66	83.82	3.300	81.28	3.200	015-91-2660		015-91-3667	015-91-0660		015-91-3666	015-91-3660		015-91-3668	015-91-0668	015-91-5669	66
68	86.36	3.400	83.82	3.300	015-91-2680		015-91-3687	015-91-0680		015-91-3686	015-91-3680		015-91-3688	015-91-0688	015-91-5689	68
70	88.90	3.500	86.36	3.400	015-91-2700		015-91-3707	015-91-0700		015-91-3706	015-91-3700		015-91-3708	015-91-0708	015-91-5709	70
72	91.44	3.600	88.90	3.500	015-91-2720		015-91-3727	015-91-0720		015-91-3726	015-91-3720		015-91-3728	015-91-0728	015-91-5729	72
74	93.98	3.700	91.44	3.600	015-91-2740		015-91-3747	015-91-0740		015-91-3746	015-91-3740		015-91-3748	015-91-0748	015-91-5749	74
76	96.52	3.800	93.98	3.700	015-91-2760		015-91-3767	015-91-0760		015-91-3766	015-91-3760		015-91-3768	015-91-0768	015-91-5769	76
78	99.06	3.900	96.52	3.800	015-91-2780		015-91-3787	015-91-0780		015-91-3786	015-91-3780		015-91-3788	015-91-0788	015-91-5789	78
80	101.60	4.000	99.06	3.900	015-91-2800		015-91-3807	015-91-0800		015-91-3806	015-91-3800		015-91-3808	015-91-0808	015-91-5809	80
82	104.14	4.100	101.60	4.000	71308-0082		71308-0482	71308-0182		71308-0582	71308-0282		71308-0682	71308-1182	71308-1282	82
84	106.68	4.200	104.14	4.100	71308-0084		71308-0484	71308-0184		71308-0584	71308-0284		71308-0684	71308-1184	71308-1284	84
86	109.22	4.300	106.68	4.200	71308-0086		71308-0486	71308-0186		71308-0586	71308-0286		71308-0686	71308-1186	71308-1286	86
88	111.76	4.400	109.22	4.300	71308-0088		71308-0488	71308-0188		71308-0588	71308-0288		71308-0688	71308-1188	71308-1288	88
90	114.30	4.500	111.76	4.400	71308-0090		71308-0490	71308-0190		71308-0590	71308-0290		71308-0690	71308-1190	71308-1290	90
92	116.84	4.600	114.30	4.500	71308-0092		71308-0492	71308-0192		71308-0592	71308-0292		71308-0692	71308-1192	71308-1292	92
94	119.38	4.700	116.84	4.600	71308-0094		71308-0494	71308-0194		71308-0594	71308-0294		71308-0694	71308-1194	71308-1294	94
96	121.92	4.800	119.38	4.700	71308-0096		71308-0496	71308-0196		71308-0596	71308-0296		71308-0696	71308-1196	71308-1296	96
98	124.46	4.900	121.92	4.800	71308-0098		71308-0498	71308-0198		71308-0598	71308-0298		71308-0698	71308-1198	71308-1298	98
100	127.00	5.000	124.46	4.900	71308-0101		71308-0500	71308-0200		71308-0600	71308-0300		71308-0700	71308-1200	71308-1300	100

NO PEG VERSION

(SEE ALSO SHEET 3)

SEE SHEET 1
EC NO: UCP2009-0323 2008/08/22
DRWN:GAVERILL 2008/08/26
CH'KD:MKIPPER 2008/08/27
APPR:FSMITH
DESCRIPTION
K1
REV

QUALITY SYMBOLS
▼=0
▽=0

GENERAL TOLERANCES (UNLESS SPECIFIED)

	mm	INCH
4 PLACES	± ---	± ---
3 PLACES	± ---	± .005
2 PLACES	± 0.13	± .010
1 PLACE	± 0.25	± ---
ANGULAR ±1/2°		

DRAFT WHERE APPLICABLE MUST REMAIN WITHIN DIMENSIONS

DIMENSION STYLE: MM/IN
SCALE
DESIGN UNITS: INCH
THIRD ANGLE PROJECTION

DRAWN BY	KMS	DATE 1999/10/15
CHECKED BY	KMS	DATE 1999/10/15
APPROVED BY	KMS	DATE 1999/10/15
MATERIAL NO.	SEE TABLE	

TITLE: SALES ASSY INSULATOR DUAL ROW SMT W/BREAK-OFF .025SQ PIN GULLWING .100

molex MOLEX INCORPORATED

DOCUMENT NO. SD-71308-001
SHEET NO. 2 OF 6

SIZE C

THIS DRAWING CONTAINS INFORMATION THAT IS PROPRIETARY TO MOLEX INCORPORATED AND SHOULD NOT BE USED WITHOUT WRITTEN PERMISSION

			IN TAPE AND REEL WITH SHALLOW POCKET TAPE						BULK / IN TUBES		
PACKAGING SEE NOTE 4, SHT 1		4-8 CKT	TAPE-N-REEL W/ VAC CAPS	TAPE-N-REEL W/ VAC CAPS					BULK	BULK	
		10-100 CKT	TAPE-N-REEL W/ VAC CAPS	TAPE-N-REEL W/ VAC CAPS					TUBES	TUBES	
DIM. M±0.25 MM			6.10 (.240)	6.10 (.240)					8.13 (.320)	13.59 (.535)	
PLATING			30 GOLD	15 GOLD					150 TIN	150 TIN	
DIM. H			2.54 (.100)	2.54 (.100)					4.57 (.180)	4.57 (.180)	
DIM. J			5.08 (.200)	5.08 (.200)					7.11 (.280)	7.11 (.280)	
CKTS	DIM. A MM	DIM. A IN	DIM. B MM	DIM. B IN	EDP NUMBER	EDP NUMBER			EDP NUMBER	EDP NUMBER	CKTS
04	5.08	.200	2.54	.100							04
06	7.62	.300	5.08	.200		015-91-6068					06
08	10.16	.400	7.62	.300		015-91-6088					08
10	12.70	.500	10.16	.400		015-91-6108			71308810	71308-8210	10
12	15.24	.600	12.70	.500							12
14	17.78	.700	15.24	.600	015-91-6148						14
16	20.32	.800	17.78	.700					71308816		16
18	22.86	.900	20.32	.800							18
20	25.40	1.000	22.86	.900							20
22	27.94	1.100	25.40	1.000							22
24	30.48	1.200	27.94	1.100							24
26	33.02	1.300	30.48	1.200							26
28	35.56	1.400	33.02	1.300							28
30	38.10	1.500	35.56	1.400							30
32	40.64	1.600	38.10	1.500							32
34	43.18	1.700	40.64	1.600							34
36	45.72	1.800	43.18	1.700							36
38	48.26	1.900	45.72	1.800							38
40	50.80	2.000	48.26	1.900							40
42	53.34	2.100	50.80	2.000							42
44	55.88	2.200	53.34	2.100							44
46	58.42	2.300	55.88	2.200							46
48	60.96	2.400	58.42	2.300							48
50	63.50	2.500	60.96	2.400							50
52	66.04	2.600	63.50	2.500							52
54	68.58	2.700	66.04	2.600							54
56	71.12	2.800	68.58	2.700							56
58	73.66	2.900	71.12	2.800							58
60	76.20	3.000	73.66	2.900							60
62	78.74	3.100	76.20	3.000							62
64	81.28	3.200	78.74	3.100							64
66	83.82	3.300	81.28	3.200							66
68	86.36	3.400	83.82	3.300							68
70	88.90	3.500	86.36	3.400							70
72	91.44	3.600	88.90	3.500							72
74	93.98	3.700	91.44	3.600							74
76	96.52	3.800	93.98	3.700							76
78	99.06	3.900	96.52	3.800							78
80	101.60	4.000	99.06	3.900							80
82	104.14	4.100	101.60	4.000							82
84	106.68	4.200	104.14	4.100							84
86	109.22	4.300	106.68	4.200							86
88	111.76	4.400	109.22	4.300							88
90	114.30	4.500	111.76	4.400							90
92	116.84	4.600	114.30	4.500							92
94	119.38	4.700	116.84	4.600							94
96	121.92	4.800	119.38	4.700							96
98	124.46	4.900	121.92	4.800							98
100	127.00	5.000	124.46	4.900							100

NO PEG VERSION

(ALSO SEE SHEET 2)

SEE SHEET 1
EC NO: UCP2009-0323
DRWN:GAVERILL 2008/08/22
CH'KD:MKIPPER 2008/08/26
APPR:FSMITH 2008/08/27
DESCRIPTION
K1
REV

QUALITY SYMBOLS
▼=0
▽=0

GENERAL TOLERANCES (UNLESS SPECIFIED)

	mm	INCH
4 PLACES	± ---	± ---
3 PLACES	± ---	± .005
2 PLACES	± 0.13	± .010
1 PLACE	± 0.25	± ---
ANGULAR ±1/2°		

DRAFT WHERE APPLICABLE MUST REMAIN WITHIN DIMENSIONS

DIMENSION STYLE: MM/IN
SCALE
DESIGN UNITS: INCH
THIRD ANGLE PROJECTION

DRAWN BY KMS	DATE 1999/10/15	
CHECKED BY KMS	DATE 1999/10/15	
APPROVED BY KMS	DATE 1999/10/15	
MATERIAL NO. SEE TABLE		

TITLE
SALES ASSY INSULATOR
DUAL ROW SMT W/BREAK-OFF
.025SQ PIN GULLWING .100

molex MOLEX INCORPORATED

DOCUMENT NO. SD-71308-001
SHEET NO. 3 OF 6

SIZE C

THIS DRAWING CONTAINS INFORMATION THAT IS PROPRIETARY TO MOLEX INCORPORATED AND SHOULD NOT BE USED WITHOUT WRITTEN PERMISSION

				PACKAGING SEE NOTE 4 SHT 1		4-8 CKT	BULK	TAPE-N-REEL W/ VAC CAPS	BULK	TAPE-N-REEL W/ VAC CAPS	BULK	TAPE-N-REEL W/ VAC CAPS	BULK	BULK	BULK				
						10-100 CKT	TUBES	TAPE-N-REEL W/ VAC CAPS	TUBES	TAPE-N-REEL W/ VAC CAPS	TUBES	TAPE-N-REEL W/ VAC CAPS	TUBES	TUBES	TUBES				
				DIM. M±0.25 MM			6.10 (.240)		6.10 (.240)		6.10 (.240)		8.13 (.320)	8.13 (.320)	8.13 (.320)				
				PLATING			150 TIN		15 GOLD		30 GOLD		150 TIN	15 GOLD	30 GOLD				
				DIM. H			2.54 (.100)		2.54 (.100)		2.54 (.100)		4.57 (.180)	4.57 (.180)	4.57 (.180)				
				DIM. J			5.08 (.200)		5.08 (.200)		5.08 (.200)		7.11 (.280)	7.11 (.280)	7.11 (.280)				
CKTS	DIM. A		DIM. B		DIM. C		EDP NUMBER	EDP NUMBER	EDP NUMBER	EDP NUMBER	EDP NUMBER	EDP NUMBER	EDP NUMBER	EDP NUMBER	EDP NUMBER	EDP NUMBER	CKTS		
	MM	IN	MM	IN	MM	IN													
04	5.08	.200	2.54	.100	----	----	015-91-1041	015-91-6044	015-91-1042	015-91-6045	015-91-1043	015-91-6046	015-91-1044	015-91-0047	015-91-1040		04		
06	7.62	.300	5.08	.200	2.54	.100	015-91-1061	015-91-6064	015-91-1062	015-91-6065	015-91-1063	015-91-6066	015-91-1064	015-91-0067	015-91-1060		06		
08	10.16	.400	7.62	.300	5.08	.200	015-91-1081	015-91-6084	015-91-1082	015-91-6085	015-91-1083	015-91-6086	015-91-1084	015-91-0087	015-91-1080		08		
10	12.70	.500	10.16	.400	7.62	.300	015-91-1101	015-91-6104	015-91-1102	015-91-6105	015-91-1103	015-91-6106	015-91-1104	015-91-0107	015-91-1100		10		
12	15.24	.600	12.70	.500	10.16	.400	015-91-1121		015-91-1122		015-91-1123		015-91-1124	015-91-0127	015-91-1120		12		
14	17.78	.700	15.24	.600	12.70	.500	015-91-1141	015-91-6144	015-91-1142	015-91-6145	015-91-1143	015-91-6146	015-91-1144	015-91-0147	015-91-1140		14		
16	20.32	.800	17.78	.700	15.24	.600	015-91-1161	015-91-6164	015-91-1162	015-91-6165	015-91-1163	015-91-6166	015-91-1164	015-91-0167	015-91-1160		16		
18	22.86	.900	20.32	.800	17.78	.700	015-91-1181		015-91-1182		015-91-1183		015-91-1184	015-91-0187	015-91-1180		18		
20	25.40	1.000	22.86	.900	20.32	.800	015-91-1201		015-91-1202		015-91-1203		015-91-1204	015-91-0207	015-91-1200		20		
22	27.94	1.100	25.40	1.000	22.86	.900	015-91-1221		015-91-1222		015-91-1223		015-91-1224	015-91-0227	015-91-1220		22		
24	30.48	1.200	27.94	1.100	25.40	1.000	015-91-1241		015-91-1242		015-91-1243		015-91-1244	015-91-0247	015-91-1240		24		
26	33.02	1.300	30.48	1.200	27.94	1.100	015-91-1261		015-91-1262		015-91-1263		015-91-1264	015-91-0267	015-91-1260		26		
28	35.56	1.400	33.02	1.300	30.48	1.200	015-91-1281		015-91-1282		015-91-1283		015-91-1284	015-91-0287	015-91-1280		28		
30	38.10	1.500	35.56	1.400	33.02	1.300	015-91-1301		015-91-1302		015-91-1303		015-91-1304	015-91-0307	015-91-1300		30		
32	40.64	1.600	38.10	1.500	35.56	1.400	015-91-1321		015-91-1322		015-91-1323		015-91-1324	015-91-0327	015-91-1320		32		
34	43.18	1.700	40.64	1.600	38.10	1.500	015-91-1341		015-91-1342		015-91-1343		015-91-1344	015-91-0347	015-91-1340		34		
36	45.72	1.800	43.18	1.700	40.64	1.600	015-91-1361		015-91-1362		015-91-1363		015-91-1364	015-91-0367	015-91-1360		36		
38	48.26	1.900	45.72	1.800	43.18	1.700	015-91-1381		015-91-1382		015-91-1383		015-91-1384	015-91-0387	015-91-1380		38		
40	50.80	2.000	48.26	1.900	45.72	1.800	015-91-1401		015-91-1402		015-91-1403		015-91-1404	015-91-0407	015-91-1400		40		
42	53.34	2.100	50.80	2.000	48.26	1.900	015-91-1421		015-91-1422		015-91-1423		015-91-1424	015-91-0427	015-91-1420		42		
44	55.88	2.200	53.34	2.100	50.80	2.000	015-91-1441		015-91-1442		015-91-1443		015-91-1444	015-91-0447	015-91-1440		44		
46	58.42	2.300	55.88	2.200	53.34	2.100	015-91-1461		015-91-1462		015-91-1463		015-91-1464	015-91-0467	015-91-1460		46		
48	60.96	2.400	58.42	2.300	55.88	2.200	015-91-1481		015-91-1482		015-91-1483		015-91-1484	015-91-0487	015-91-1480		48		
50	63.50	2.500	60.96	2.400	58.42	2.300	015-91-1501	015-91-6504	015-91-1502	015-91-6505	015-91-1503	015-91-6506	015-91-1504	015-91-0507	015-91-1500		50		
52	66.04	2.600	63.50	2.500	60.96	2.400	015-91-1521		015-91-1522		015-91-1523	71308-5203	015-91-1524	015-91-0527	015-91-1520		52		
54	68.58	2.700	66.04	2.600	63.50	2.500	015-91-1541		015-91-1542		015-91-1543		015-91-1544	015-91-0547	015-91-1540		54		
56	71.12	2.800	68.58	2.700	66.04	2.600	015-91-1561		015-91-1562		015-91-1563		015-91-1564	015-91-0567	015-91-1560		56		
58	73.66	2.900	71.12	2.800	68.58	2.700	015-91-1581		015-91-1582		015-91-1583		015-91-1584	015-91-0587	015-91-1580		58		
60	76.20	3.000	73.66	2.900	71.12	2.800	015-91-1601		015-91-1602		015-91-1603		015-91-1604	015-91-0607	015-91-1600		60		
62	78.74	3.100	76.20	3.000	73.66	2.900	015-91-1621		015-91-1622		015-91-1623		015-91-1624	015-91-0627	015-91-1620		62		
64	81.28	3.200	78.74	3.100	76.20	3.000	015-91-1641		015-91-1642		015-91-1643		015-91-1644	015-91-0647	015-91-1640		64		
66	83.82	3.300	81.28	3.200	78.74	3.100	015-91-1661		015-91-1662		015-91-1663		015-91-1664	015-91-0667	015-91-1660		66		
68	86.36	3.400	83.82	3.300	81.28	3.200	015-91-1681		015-91-1682		015-91-1683		015-91-1684	015-91-0687	015-91-1680		68		
70	88.90	3.500	86.36	3.400	83.82	3.300	015-91-1701		015-91-1702		015-91-1703		015-91-1704	015-91-0707	015-91-1700		70		
72	91.44	3.600	88.90	3.500	86.36	3.400	015-91-1721		015-91-1722		015-91-1723		015-91-1724	015-91-0727	015-91-1720		72		
74	93.98	3.700	91.44	3.600	88.90	3.500	015-91-1741		015-91-1742		015-91-1743		015-91-1744	015-91-0747	015-91-1740		74		
76	96.52	3.800	93.98	3.700	91.44	3.600	015-91-1761		015-91-1762		015-91-1763		015-91-1764	015-91-0767	015-91-1760		76		
78	99.06	3.900	96.52	3.800	93.98	3.700	015-91-1781		015-91-1782		015-91-1783		015-91-1784	015-91-0787	015-91-1780		78		
80	101.60	4.000	99.06	3.900	96.52	3.800	015-91-1801		015-91-1802		015-91-1803		015-91-1804	015-91-0807	015-91-1800		80		
82	104.14	4.100	101.60	4.000	99.06	3.900	71308-4082		71308-4182		71308-4282		71308-5082	71308-5182	71308-5282		82		
84	106.68	4.200	104.14	4.100	101.60	4.000	71308-4084		71308-4184		71308-4284		71308-5084	71308-5184	71308-5284		84		
86	109.22	4.300	106.68	4.200	104.14	4.100	71308-4086		71308-4186		71308-4286		71308-5086	71308-5186	71308-5286		86		
88	111.76	4.400	109.22	4.300	106.68	4.200	71308-4088		71308-4188		71308-4288		71308-5088	71308-5188	71308-5288		88		
90	114.30	4.500	111.76	4.400	109.22	4.300	71308-4090		71308-4190		71308-4290		71308-5090	71308-5190	71308-5290		90		
92	116.84	4.600	114.30	4.500	111.76	4.400	71308-4092		71308-4192		71308-4292		71308-5092	71308-5192	71308-5292		92		
94	119.38	4.700	116.84	4.600	114.30	4.500	71308-4094		71308-4194		71308-4294		71308-5094	71308-5194	71308-5294		94		
96	121.92	4.800	119.38	4.700	116.84	4.600	71308-4096		71308-4196		71308-4296		71308-5096	71308-5196	71308-5296		96		
98	124.46	4.900	121.92	4.800	119.38	4.700	71308-4098		71308-4198		71308-4298		71308-5098	71308-5198	71308-5298		98		
100	127.00	5.000	124.46	4.900	121.92	4.800	71308-4100		71308-4200		71308-4300		71308-5100	71308-5200	71308-5300		100		

LONG PEG VERSION (.130")

SEE SHEET 1
EC NO: UCP2009-0323 2008/08/22
DRWN:GAVERILL 2008/08/26
CH'KD:MKIPPER 2008/08/27
APPR:FSMITH
DESCRIPTION
K1
REV

QUALITY SYMBOLS
▼=0
▽=0

GENERAL TOLERANCES (UNLESS SPECIFIED)

	mm	INCH
4 PLACES	± ---	± ---
3 PLACES	± ---	± .005
2 PLACES	± 0.13	± .010
1 PLACE	± 0.25	± ---
ANGULAR ±1/2°		

DRAFT WHERE APPLICABLE MUST REMAIN WITHIN DIMENSIONS

DIMENSION STYLE: MM/IN
SCALE
DESIGN UNITS: INCH
THIRD ANGLE PROJECTION

DRAWN BY	KMS	DATE 1999/10/15
CHECKED BY	KMS	DATE 1999/10/15
APPROVED BY	KMS	DATE 1999/10/15
MATERIAL NO.	SEE TABLE	

TITLE: SALES ASSY INSULATOR DUAL ROW SMT W/BREAK-OFF .025SQ PIN GULLWING .100

molex MOLEX INCORPORATED

DOCUMENT NO. SD-71308-001
SHEET NO. 4 OF 6

SIZE C

THIS DRAWING CONTAINS INFORMATION THAT IS PROPRIETARY TO MOLEX INCORPORATED AND SHOULD NOT BE USED WITHOUT WRITTEN PERMISSION

PACKAGING SEE NOTE 4 SHT 1																	
	4-8 CKT	BULK		TAPE-N-REEL W/ VAC CAPS		BULK		TAPE-N-REEL W/ VAC CAPS									
	10-100 CKT	TUBES		TAPE-N-REEL W/ VAC CAPS		TUBES		TAPE-N-REEL W/ VAC CAPS									
DIM. M ±0.25 MM		6.10 (.240)				6.10 (.240)											
PLATING		30 GOLD				150 TIN											
DIM. H		2.54 (.100)				2.54 (.100)											
DIM. J		5.08 (.200)				5.08 (.200)											

CKTS	DIM. A		DIM. B		DIM. C		EDP NUMBER	EDP NUMBER	EDP NUMBER	EDP NUMBER	EDP NUMBER	EDP NUMBER	EDP NUMBER	EDP NUMBER	EDP NUMBER	EDP NUMBER	CKTS
	MM	IN	MM	IN	MM	IN											
04	5.08	.200	2.54	.100	----	----	015-91-1048	015-91-6047									04
06	7.62	.300	5.08	.200	2.54	.100	015-91-1068	015-91-6067	71308-6106	71308-6206							06
08	10.16	.400	7.62	.300	5.08	.200	015-91-1088	015-91-6087	71308-6108	71308-6208							08
10	12.70	.500	10.16	.400	7.62	.300	015-91-1108	015-91-6107	71308-6110	71308-6210							10
12	15.24	.600	12.70	.500	10.16	.400	015-91-1128										12
14	17.78	.700	15.24	.600	12.70	.500	015-91-1148	015-91-6147									14
16	20.32	.800	17.78	.700	15.24	.600	015-91-1168	015-91-6167									16
18	22.86	.900	20.32	.800	17.78	.700	015-91-1188										18
20	25.40	1.000	22.86	.900	20.32	.800	015-91-1208	015-91-6207									20
22	27.94	1.100	25.40	1.000	22.86	.900	015-91-1228										22
24	30.48	1.200	27.94	1.100	25.40	1.000	015-91-1248										24
26	33.02	1.300	30.48	1.200	27.94	1.100	015-91-1268		71308-6126								26
28	35.56	1.400	33.02	1.300	30.48	1.200	015-91-1288										28
30	38.10	1.500	35.56	1.400	33.02	1.300	015-91-1308										30
32	40.64	1.600	38.10	1.500	35.56	1.400	015-91-1328										32
34	43.18	1.700	40.64	1.600	38.10	1.500	015-91-1348										34
36	45.72	1.800	43.18	1.700	40.64	1.600	015-91-1368										36
38	48.26	1.900	45.72	1.800	43.18	1.700	015-91-1388										38
40	50.80	2.000	48.26	1.900	45.72	1.800	015-91-1408	015-91-6407									40
42	53.34	2.100	50.80	2.000	48.26	1.900	015-91-1428										42
44	55.88	2.200	53.34	2.100	50.80	2.000	015-91-1448										44
46	58.42	2.300	55.88	2.200	53.34	2.100	015-91-1468										46
48	60.96	2.400	58.42	2.300	55.88	2.200	015-91-1488										48
50	63.50	2.500	60.96	2.400	58.42	2.300	015-91-1508	015-91-6507									50
52	66.04	2.600	63.50	2.500	60.96	2.400	015-91-1528										52
54	68.58	2.700	66.04	2.600	63.50	2.500	015-91-1548										54
56	71.12	2.800	68.58	2.700	66.04	2.600	015-91-1568										56
58	73.66	2.900	71.12	2.800	68.58	2.700	015-91-1588										58
60	76.20	3.000	73.66	2.900	71.12	2.800	015-91-1608										60
62	78.74	3.100	76.20	3.000	73.66	2.900	015-91-1628										62
64	81.28	3.200	78.74	3.100	76.20	3.000	015-91-1648										64
66	83.82	3.300	81.28	3.200	78.74	3.100	015-91-1668										66
68	86.36	3.400	83.82	3.300	81.28	3.200	015-91-1688										68
70	88.90	3.500	86.36	3.400	83.82	3.300	015-91-1708										70
72	91.44	3.600	88.90	3.500	86.36	3.400	015-91-1728										72
74	93.98	3.700	91.44	3.600	88.90	3.500	015-91-1748										74
76	96.52	3.800	93.98	3.700	91.44	3.600	015-91-1768										76
78	99.06	3.900	96.52	3.800	93.98	3.700	015-91-1788										78
80	101.60	4.000	99.06	3.900	96.52	3.800	015-91-1808										80
82	104.14	4.100	101.60	4.000	99.06	3.900	71308-6082										82
84	106.68	4.200	104.14	4.100	101.60	4.000	71308-6084										84
86	109.22	4.300	106.68	4.200	104.14	4.100	71308-6086										86
88	111.76	4.400	109.22	4.300	106.68	4.200	71308-6088										88
90	114.30	4.500	111.76	4.400	109.22	4.300	71308-6090										90
92	116.84	4.600	114.30	4.500	111.76	4.400	71308-6092										92
94	119.38	4.700	116.84	4.600	114.30	4.500	71308-6094										94
96	121.92	4.800	119.38	4.700	116.84	4.600	71308-6096										96
98	124.46	4.900	121.92	4.800	119.38	4.700	71308-6098										98
100	127.00	5.000	124.46	4.900	121.92	4.800	71308-6100										100

SHORT PEG VERSION (.055")

SEE SHEET 1
EC NO: UCP2009-0323
DRWN:GAVERILL 2008/08/22
CH'KD:MKIPPER 2008/08/26
APPR:FSMITH 2008/08/27
DESCRIPTION
K1
REV

QUALITY SYMBOLS
▼=0
▽C=0

GENERAL TOLERANCES (UNLESS SPECIFIED)

	mm	INCH
4 PLACES	± ---	± ---
3 PLACES	± ---	± .005
2 PLACES	± 0.13	± .010
1 PLACE	± 0.25	± ---
ANGULAR ±1/2°		

DRAFT WHERE APPLICABLE MUST REMAIN WITHIN DIMENSIONS

DIMENSION STYLE: MM/IN
SCALE
DESIGN UNITS: INCH
THIRD ANGLE PROJECTION

DRAWN BY	KMS	DATE 1999/10/15
CHECKED BY	KMS	DATE 1999/10/15
APPROVED BY	KMS	DATE 1999/10/15

TITLE: SALES ASSY INSULATOR DUAL ROW SMT W/BREAK-OFF .025SQ PIN GULLWING .100

molex MOLEX INCORPORATED

MATERIAL NO.: SEE TABLE
DOCUMENT NO.: SD-71308-001
SHEET NO.: 5 OF 6
SIZE: C

THIS DRAWING CONTAINS INFORMATION THAT IS PROPRIETARY TO MOLEX INCORPORATED AND SHOULD NOT BE USED WITHOUT WRITTEN PERMISSION

												PEG OPTION											
												NO PEG VERSION											
PACKAGING SEE NOTE 4, SHT 1						4-6 CKT			BULK	TAPE-N-REEL W/VAC CAPS	N/A		4-8 CKT	TAPE-N-REEL W/VAC CAPS	BULK	BULK	BULK	TAPE-N-REEL W/VAC CAPS	BULK	BULK	TAPE-N-REEL W/ VAC CAPS		
						8-100 CKT			TUBES	TAPE-N-REEL W/VAC CAPS	TUBES W/ VAC CAPS		10-100 CKT	TAPE-N-REEL W/VAC CAPS	TUBES	TUBES	TUBES	TAPE-N-REEL W/VAC CAPS	TUBES	BULK	TAPE-N-REEL W/ VAC CAPS		
DIM. M±0.25 MM									6.10 (.240)					8.13(.320)		13.59(.535)	6.10(.240)		8.13(.320)	6.10 (.240)			
PLATING									59 TIN					59 TIN		59 TIN	59 TIN		59 TIN	59 TIN			
DIM. H									2.54(.100)					4.57(.180)		4.57(.180)	2.54(.100)		4.57(.180)	2.54(.100)			
DIM. J									5.08(.200)					7.11(.280)		7.11(.280)	5.08(.200)		7.11(.280)	5.08(.200)			
CKTS	DIM. A		DIM. B		DIM. C		EDP NUMBER	EDP NUMBER	EDP NUMBER			EDP NUMBER	EDP NUMBER	EDP NUMBER	EDP NUMBER	EDP NUMBER	EDP NUMBER	EDP NUMBER	EDP NUMBER	EDP NUMBER		CKTS
	MM	IN	MM	IN	MM	IN																	
04	5.08	.200	2.54	.100	---	---	71308-5404	71308-5504	N/A								71308-6404	71308-6504	71308-6604				04
06	7.62	.300	5.08	.200	2.54	.100	71308-5406	71308-5506	N/A								71308-6406	71308-6506	71308-6606	71308-6706	71308-6806		06
08	10.16	.400	7.62	.300	5.08	.200	71308-5408	71308-5508	71308-5608								71308-6408	71308-6508	71308-6608	71308-6708	71308-6808		08
10	12.70	.500	10.16	.400	7.62	.300	71308-5410	71308-5510	71308-5610						71308-5810	71308-5910	71308-6410	71308-6510	71308-6610	71308-6710	71308-6810		10
12	15.24	.600	12.70	.500	10.16	.400	71308-5412		71308-5612								71308-6412		71308-6612				12
14	17.78	.700	15.24	.600	12.70	.500	71308-5414	71308-5514	71308-5614								71308-6414	71308-6514	71308-6614				14
16	20.32	.800	17.78	.700	15.24	.600	71308-5416	71308-5516	71308-5616						71308-5816		71308-6416	71308-6516	71308-6616				16
18	22.86	.900	20.32	.800	17.78	.700	71308-5418		71308-5618								71308-6418		71308-6618				18
20	25.40	1.000	22.86	.900	20.32	.800	71308-5420	71308-5520	71308-5620								71308-6420		71308-6620				20
22	27.94	1.100	25.40	1.000	22.86	.900	71308-5422		71308-5622								71308-6422		71308-6622				22
24	30.48	1.200	27.94	1.100	25.40	1.000	71308-5424		71308-5624					71308-5724	71308-5824		71308-6424		71308-6624				24
26	33.02	1.300	30.48	1.200	27.94	1.100	71308-5426		71308-5626								71308-6426		71308-6626	71308-6726			26
28	35.56	1.400	33.02	1.300	30.48	1.200	71308-5428		71308-5628								71308-6428		71308-6628				28
30	38.10	1.500	35.56	1.400	33.02	1.300	71308-5430		71308-5630								71308-6430		71308-6630				30
32	40.64	1.600	38.10	1.500	35.56	1.400	71308-5432		71308-5632								71308-6432		71308-6632				32
34	43.18	1.700	40.64	1.600	38.10	1.500	71308-5434		71308-5634								71308-6434		71308-6634				34
36	45.72	1.800	43.18	1.700	40.64	1.600	71308-5436		71308-5636								71308-6436		71308-6636				36
38	48.26	1.900	45.72	1.800	43.18	1.700	71308-5438		71308-5638								71308-6438		71308-6638				38
40	50.80	2.000	48.26	1.900	45.72	1.800	71308-5440	71308-5540	71308-5640								71308-6440		71308-6640				40
42	53.34	2.100	50.80	2.000	48.26	1.900	71308-5442		71308-5642								71308-6442		71308-6642				42
44	55.88	2.200	53.34	2.100	50.80	2.000	71308-5444		71308-5644								71308-6444		71308-6644				44
46	58.42	2.300	55.88	2.200	53.34	2.100	71308-5446		71308-5646								71308-6446		71308-6646				46
48	60.96	2.400	58.42	2.300	55.88	2.200	71308-5448		71308-5648								71308-6448		71308-6648				48
50	63.50	2.500	60.96	2.400	58.42	2.300	71308-5450	71308-5550	71308-5650								71308-6450	71308-6550	71308-6650				50
52	66.04	2.600	63.50	2.500	60.96	2.400	71308-5452		71308-5652								71308-6452		71308-6652				52
54	68.58	2.700	66.04	2.600	63.50	2.500	71308-5454		71308-5654								71308-6454		71308-6654				54
56	71.12	2.800	68.58	2.700	66.04	2.600	71308-5456		71308-5656								71308-6456		71308-6656				56
58	73.66	2.900	71.12	2.800	68.58	2.700	71308-5458		71308-5658								71308-6458		71308-6658				58
60	76.20	3.000	73.66	2.900	71.12	2.800	71308-5460		71308-5660								71308-6460		71308-6660				60
62	78.74	3.100	76.20	3.000	73.66	2.900	71308-5462		71308-5662								71308-6462		71308-6662				62
64	81.28	3.200	78.74	3.100	76.20	3.000	71308-5464		71308-5664								71308-6464		71308-6664				64
66	83.82	3.300	81.28	3.200	78.74	3.100	71308-5466		71308-5666								71308-6466		71308-6666				66
68	86.36	3.400	83.82	3.300	81.28	3.200	71308-5468		71308-5668								71308-6468		71308-6668				68
70	88.90	3.500	86.36	3.400	83.82	3.300	71308-5470		71308-5670								71308-6470		71308-6670				70
72	91.44	3.600	88.90	3.500	86.36	3.400	71308-5472		71308-5672								71308-6472		71308-6672				72
74	93.98	3.700	91.44	3.600	88.90	3.500	71308-5474		71308-5674								71308-6474		71308-6674				74
76	96.52	3.800	93.98	3.700	91.44	3.600	71308-5476		71308-5676								71308-6476		71308-6676				76
78	99.06	3.900	96.52	3.800	93.98	3.700	71308-5478		71308-5678								71308-6478		71308-6678				78
80	101.60	4.000	99.06	3.900	96.52	3.800	71308-5480		71308-5680								71308-6480		71308-6680				80
82	104.14	4.100	101.60	4.000	99.06	3.900	71308-5482		71308-5682								71308-6482		71308-6682				82
84	106.68	4.200	104.14	4.100	101.60	4.000	71308-5484		71308-5684								71308-6484		71308-6684				84
86	109.22	4.300	106.68	4.200	104.14	4.100	71308-5486		71308-5686								71308-6486		71308-6686				86
88	111.76	4.400	109.22	4.300	106.68	4.200	71308-5488		71308-5688								71308-6488		71308-6688				88
90	114.30	4.500	111.76	4.400	109.22	4.300	71308-5490		71308-5690								71308-6490		71308-6690				90
92	116.84	4.600	114.30	4.500	111.76	4.400	71308-5492		71308-5692								71308-6492		71308-6692				92
94	119.38	4.700	116.84	4.600	114.30	4.500	71308-5494		71308-5694								71308-6494		71308-6694				94
96	121.92	4.800	119.38	4.700	116.84	4.600	71308-5496		71308-5696								71308-6496		71308-6696				96
98	124.46	4.900	121.92	4.800	119.38	4.700	71308-5498		71308-5698								71308-6498		71308-6698				98
100	127.00	5.000	124.46	4.900	121.92	4.800	71308-5500		71308-5700								71308-6500		71308-6700				100

59 TIN PLATE ASSEMBLIES

SEE SHEET 1
EC NO: UCP2009-0323
DRWN:GAVERILL 2008/08/22
CH'KD:MKIPPER 2008/08/26
APPR:FSMITH 2008/08/27
DESCRIPTION
K1
REV

QUALITY SYMBOLS
▼=0
▽(C)=0

GENERAL TOLERANCES (UNLESS SPECIFIED)

	mm	INCH
4 PLACES	± ---	± ---
3 PLACES	± ---	± .005
2 PLACES	± 0.13	± .010
1 PLACE	± 0.25	± ---
ANGULAR ±1/2°		

DRAFT WHERE APPLICABLE MUST REMAIN WITHIN DIMENSIONS

DIMENSION STYLE: MM/IN
SCALE: 1:1
DESIGN UNITS: INCH
THIRD ANGLE PROJECTION

DRAWN BY: KMS DATE: 1999/10/15
CHECKED BY: KMS DATE: 1999/10/15
APPROVED BY: KMS DATE: 1999/10/15

TITLE: SALES ASSY INSULATOR DUAL ROW SMT W/BREAK-OFF .025SQ PIN GULLWING .100

molex MOLEX INCORPORATED

MATERIAL NO.: SEE TABLE
DOCUMENT NO.: SD-71308-001
SHEET NO.: 6 OF 6
SIZE: C

THIS DRAWING CONTAINS INFORMATION THAT IS PROPRIETARY TO MOLEX INCORPORATED AND SHOULD NOT BE USED WITHOUT WRITTEN PERMISSION